ECCO GRILLES, REGISTERS AND DIFFUSERS

INDEX

DIFFUSERS
- BASEBOARD (BB) — WHITE 8-9
- PLASTIC — FLOOR 8-10

GRILLES
- BASEBOARD (BBGT) 8-5
- PROJECTION (BBGT-B) — STEEL — WHITE 8-5
- RETURN AIR FILTER (RAF) — WHITE 8-4
- RETURN AIR (RA) ..... 8-2 – 8-4
- TOE SPACE (FL-01) 8-2
- TRUSTEEL FLOOR (TFG) 8-6

REGISTERS
- BASEBOARD (BBRT) — WHITE 8-8
- CEILING (CR) — WHITE 8-9
- FLOOR (FL) 8-7
- SIDEWALL (BBRT-B) — STEEL — WHITE 8-9
- SINGLE DEFLECTION (SDF) — ALUMINUM & STEEL — WHITE 8-8

LEGEND

NOTE: The boxed columns throughout the tables are intended to provide a quick determination of ordering dimensions.

ABBREVIATIONS: CTN/QTY = Carton Quantity

Expert Service. Quality Products. Since 1960.

ECCO GRILLES, REGISTERS AND DIFFUSERS

TOE SPACE GRILLES (FL-01)

ITEM #	MODEL	SIZE (")	COLOUR	CTN/QTY
725340	1FL0210BR-01	2 × 10	Brown	40
725341	1FL0210WH-01	2 × 10	White	40
725342	1FL0212BR-01	2 × 12	Brown	40
725343	1FL0212WH-01	2 × 12	White	40
725344	1FL0214BR-01	2 × 14	Brown	40
725345	1FL0214WH-01	2 × 14	White	40
725346	1FL0310BR-01	3 × 10	Brown	40
725347	1FL0310WH-01	3 × 10	White	40
725348	1FL0408BR-01	4 × 8	Brown	40
725349	1FL0408WH-01	4 × 8	White	40
725350	1FL0410BR-01	4 × 10	Brown	40
725351	1FL0410WH-01	4 × 10	White	40
725352	1FL0412BR-01	4 × 12	Brown	40
725353	1FL0412WH-01	4 × 12	White	40
725354	1FL0414BR-01	4 × 14	Brown	40
725355	1FL0414WH-01	4 × 14	White	40
725356	1FL0610BR-01	6 × 10	Brown	40
725357	1FL0610WH-01	6 × 10	White	40
725358	1FL0612BR-01	6 × 12	Brown	40
725359	1FL0612WH-01	6 × 12	White	40
725360	1FL0614BR-01	6 × 14	Brown	40
725361	1FL0614WH-01	6 × 14	White	40

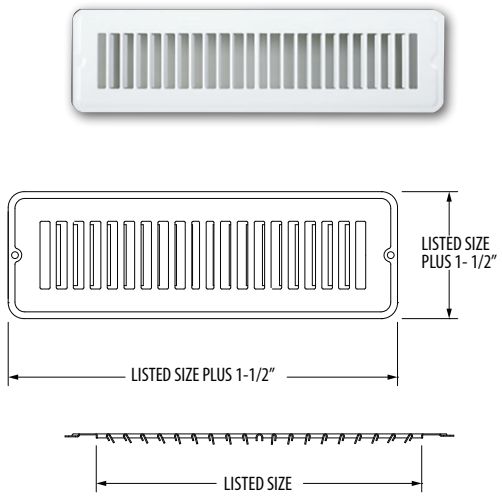

RETURN AIR GRILLES (RA)

ITEM #	MODEL	SIZE (")	COLOUR	CTN/QTY
726540	1RA0604WH-1/3	6 × 4	White	40
726541	1RA0606WH-1/3	6 × 6	White	40
726542	1RA0804WH-1/3	8 × 4	White	40
726543	1RA0806WH-1/3	8 × 6	White	40
726544	1RA0808WH-1/3	8 × 8	White	40
726545	1RA1004WH-1/3	10 × 4	White	20
726546	1RA1006WH-1/3	10 × 6	White	20
726547	1RA1008WH-1/3	10 × 8	White	20
726548	1RA1010WH-1/3	10 × 10	White	20
726549	1RA1020WH-1/3	10 × 20	White	20
726550	1RA1204WH-1/3	12 × 4	White	20
726551	1RA1206WH-1/3	12 × 6	White	20
726552	1RA1206PE-1/3	12 × 6	Pewter	20
726553	1RA1208WH-1/3	12 × 8	White	20
726554	1RA1210WH-1/3	12 × 10	White	20
726555	1RA1212WH-1/3	12 × 12	White	20
726556	1RA1218WH-1/3	12 × 18	White	10
726557	1RA1220WH-1/3	12 × 20	White	10
726558	1RA1224WH-1/3	12 × 24	White	10
726559	1RA1236WH-1/3	12 × 36	White	10
726560	1RA1404WH-1/3	14 × 4	White	20
726561	1RA1406WH-1/3	14 × 6	White	20
726562	1RA1408WH-1/3	14 × 8	White	20
726562	1RA1408WH-1/3	14 × 8	Pewter	20
726564	1RA1410WH-1/3	14 × 10	White	20
726565	1RA1412WH-1/3	14 × 12	White	20

(cont'd on next page)

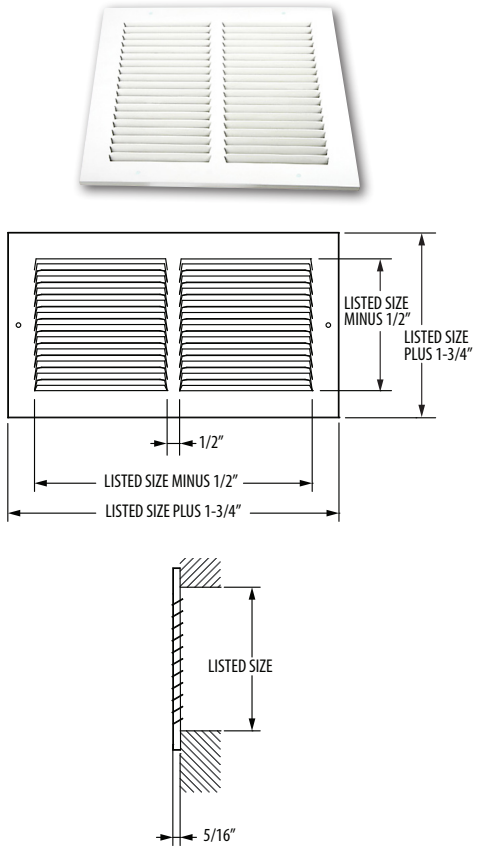

– E.&O.E. – All Prices F.O.B. Our Warehouse – Subject to Change Without Notice – All Taxes Extra – May not be Available at All Branches –

RETURN AIR GRILLES (RA) *(cont'd)*

ITEM #	MODEL	SIZE (")	COLOUR	CTN/QTY
726566	1RA1414WH-1/3	14 × 14	White	20
726567	1RA1420WH-1/3	14 × 20	White	10
726568	1RA1424WH-1/3	14 × 24	White	10
726569	1RA1425WH-1/3	14 × 25	White	10
726570	1RA1430WH-1/3	14 × 30	White	10
726571	1RA1606WH-1/3	16 × 6	White	20
726572	1RA1608WH-1/3	16 × 8	White	20
726573	1RA1610WH-1/3	16 × 10	White	20
726574	1RA1612WH-1/3	16 × 12	White	20
726575	1RA1614WH-1/3	16 × 14	White	10
726576	1RA1616WH-1/3	16 × 16	White	10
726577	1RA1620WH-1/3	16 × 20	White	10
726578	1RA1624WH-1/3	16 × 24	White	10
726579	1RA1625WH-1/3	16 × 25	White	10
726580	1RA1630WH-1/3	16 × 30	White	10
726581	1RA1804WH-1/3	18 × 4	White	10
726582	1RA1806WH-1/3	18 × 6	White	20
726583	1RA1808WH-1/3	18 × 8	White	20
726584	1RA1810WH-1/3	18 × 10	White	20
726585	1RA1812WH-1/3	18 × 12	White	20
726586	1RA1814WH-1/3	18 × 14	White	10
726587	1RA1816WH-1/3	18 × 16	White	10
726588	1RA1818WH-1/3	18 × 18	White	10
726589	1RA1824WH-1/3	18 × 24	White	10
726590	1RA1836WH-1/3	18 × 36	White	10
726591	1RA2004WH-1/3	20 × 4	White	20
726592	1RA2006WH-1/3	20 × 6	White	20
726593	1RA2006PE-1/3	20 × 6	Pewter	20
726594	1RA2008WH-1/3	20 × 8	White	20
726595	1RA2010WH-1/3	20 × 10	White	10
726596	1RA2012WH-1/3	20 × 12	White	10
726597	1RA2014WH-1/3	20 × 14	White	10
726598	1RA2016WH-1/3	20 × 16	White	10
726599	1RA2018WH-1/3	20 × 18	White	10
726600	1RA2020WH-1/3	20 × 20	White	10
726601	1RA2024WH-1/3	20 × 24	White	10
726602	1RA2025WH-1/3	20 × 25	White	10
726603	1RA2030WH-1/3	20 × 30	White	10
726604	1RA2036WH-1/3	20 × 36	White	5
726605	1RA2404WH-1/3	24 × 4	White	10
726606	1RA2406WH-1/3	24 × 6	White	10
726607	1RA2408WH-1/3	24 × 8	White	10
726608	1RA2408PE-1/3	24 × 8	Pewter	20
726609	1RA2410WH-1/3	24 × 10	White	10
726610	1RA2412WH-1/3	24 × 12	White	10
726611	1RA2414WH-1/3	24 × 14	White	10
726612	1RA2416WH-1/3	24 × 16	White	10
726613	1RA2418WH-1/3	24 × 18	White	10
726614	1RA2420WH-1/3	24 × 20	White	10
726615	1RA2424WH-1/3	24 × 24	White	10
726616	1RA2426WH-1/3	24 × 26	White	10
726617	1RA2430WH-1/3	24 × 30	White	5

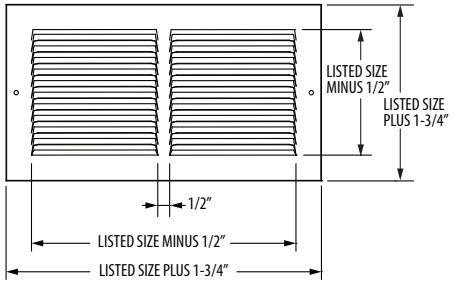

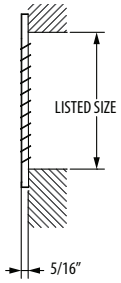

(cont'd on next page)

ECCO GRILLES, REGISTERS AND DIFFUSERS

RETURN AIR GRILLES (RA) *(cont'd)*

ITEM #	MODEL	SIZE (")	COLOUR	CTN/QTY
726618	1RA2436WH-1/3	24 × 36	White	5
726619	1RA2514WH-1/3	25 × 14	White	10
726620	1RA2516WH-1/3	25 × 16	White	10
726621	1RA2520WH-1/3	25 × 20	White	10
726622	1RA2525WH-1/3	25 × 25	White	5
726623	1RA2630WH-1/3	26 × 30	White	5
726624	1RA3004WH-1/3	30 × 4	White	20
726625	1RA3006WH-1/3	30 × 6	White	20
726626	1RA3008WH-1/3	30 × 8	White	10
726627	1RA3008PE-1/3	30 × 8	Pewter	10
726628	1RA3010WH-1/3	30 × 10	White	10
726629	1RA3012WH-1/3	30 × 12	White	10
726630	1RA3014WH-1/3	30 × 14	White	10
726631	1RA3016WH-1/3	30 × 16	White	10
726632	1RA3018WH-1/3	30 × 18	White	10
726633	1RA3020WH-1/3	30 × 20	White	10
726634	1RA3024WH-1/3	30 × 24	White	5
726635	1RA3030WH-1/3	30 × 30	White	5
726636	1RA3606WH-1/3	36 × 6	White	20
726637	1RA3608WH-1/3	36 × 8	White	10
726638	1RA3610WH-1/3	36 × 10	White	10
726639	1RA3612WH-1/3	36 × 12	White	10
726640	1RA3614WH-1/3	36 × 14	White	10
726641	1RA3616WH-1/3	36 × 16	White	10
726642	1RA3618WH-1/3	36 × 18	White	10
726643	1RA3620WH-1/3	36 × 20	White	5
726644	1RA3624WH-1/3	36 × 24	White	5
726645	1RA3630WH-1/3	36 × 30	White	5
726646	1RA3636WH-1/3	36 × 36	White	5
726647	1RA4020WH-1/3	40 × 20	White	5

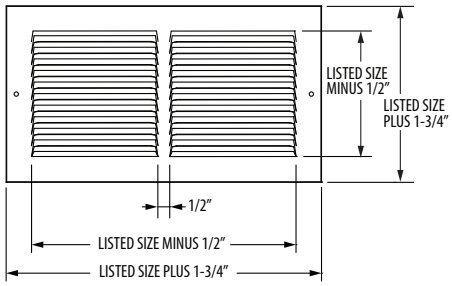

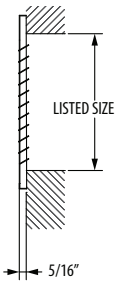

RETURN AIR FILTER GRILLES (RAF) — WHITE

ITEM #	MODEL	SIZE (")	CTN/QTY
726660	1RAF1006WH-1/3	10 × 6	8

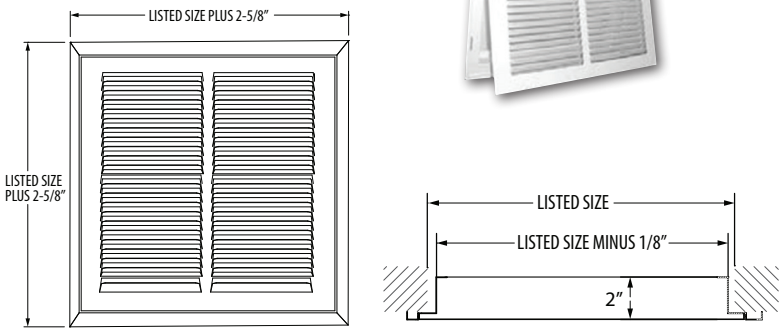

– E.&O.E. – All Prices F.O.B. Our Warehouse – Subject to Change Without Notice – All Taxes Extra – May not be Available at All Branches –

BASEBOARD GRILLES (BBGT)

ITEM #	MODEL	SIZE (")	COLOUR	CTN/QTY
725720	BBGT1006WH	10 × 6	White	20
725721	BBGT1206WH	12 × 6	White	20
725722	BBGT1208WH	12 × 8	White	20
725723	BBGT1208PE	12 × 8	Pewter	20
725724	BBGT1406WH	14 × 6	White	20
725725	BBGT1406PE	14 × 6	Pewter	20
725726	BBGT1406BB	14 × 6	Brasss	20
725727	BBGT1408WH	14 × 8	White	20
725728	BBGT1408PE	14 × 8	Pewter	20
725729	BBGT1408BB	14 × 8	Brass	20
725730	BBGT1606WH	16 × 6	White	20
725738	BBGT1608WH	16 × 8	White	20
725731	BBGT1806WH	18 × 6	White	20
725732	BBGT2406WH	24 × 6	White	10
725733	BBGT2406PE	24 × 6	Pewter	10
725734	BBGT2406BB	24 × 6	Brass	10
725735	BBGT2408WH	24 × 8	White	10
725736	BBGT2408PE	24 × 8	Pewter	10
725737	BBGT2408BB	24 × 8	Brass	10
725739	BBGT3006WH	30 × 6	White	10
725740	BBGT3006PE	30 × 6	Pewter	10
725741	BBGT3006BB	30 × 6	Brass	10
725742	BBGT3008WH	30 × 8	White	10
725743	BBGT3008PE	30 × 8	Pewter	10
725744	BBGT3008BB	30 × 8	Brass	10

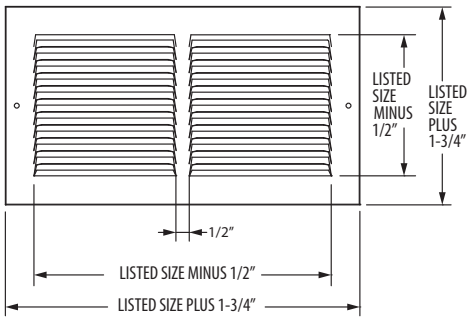

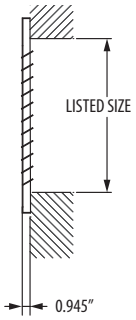

PROJECTION GRILLES (BBGT-B) — STEEL — WHITE

ITEM #	MODEL	SIZE (")	CTN/QTY
725915	BBGT1406WH-B	14 × 6	20
725916	BBGT1408WH-B	14 × 8	20
725917	BBGT2406WH-B	24 × 6	10
725918	BBGT2408WH-B	24 × 8	20
725919	BBGT3006WH-B	30 × 6	10
725920	BBGT3008WH-B	30 × 8	10

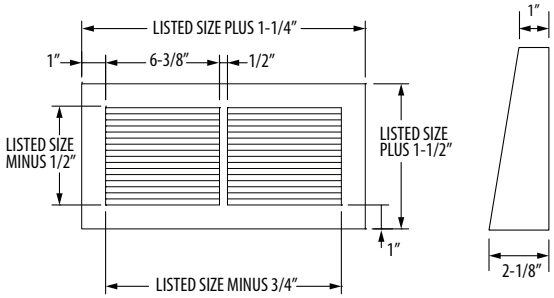

– E.&O.E. – All Prices F.O.B. Our Warehouse – Subject to Change Without Notice – All Taxes Extra – May not be Available at All Branches –

TRUSTEEL FLOOR GRILLES (TFG)

ITEM #	MODEL	SIZE (")	COLOUR	CTN/QTY
725844	1TFG0408BR	4 × 8	Brown	20
725891	1TFG0410WH	4 × 10	White	20
725840	1TFG0410BR	4 × 10	Brown	20
725892	1TFG0412WH	4 × 12	White	20
725841	1TFG0412BR	4 × 12	Brown	20
725843	1TFG0414WH	4 × 14	White	20
725842	1TFG0414BR	4 × 14	Brown	20
725846	1TFG0424BR	4 × 24	Brown	10
725847	1TFG0430BR	4 × 30	Brown	10
725845	1TFG0608BR	6 × 8	Brown	20
725849	1TFG0610WH	6 × 10	White	20
725850	1TFG0610BR	6 × 10	Brown	20
725889	1TFG0612WH	6 × 12	White	20
725851	1TFG0612BR	6 × 12	Brown	20
725848	1TFG0614WH	6 × 14	White	10
725852	1TFG0614BR	6 × 14	Brown	10
725853	1TFG0616BR	6 × 16	Brown	10
725854	1TFG0618BR	6 × 18	Brown	10
725855	1TFG0620BR	6 × 20	Brown	10
725885	1TFG0624WH	6 × 24	White	5
725856	1TFG0624BR	6 × 24	Brown	10
725857	1TFG0630BR	6 × 30	Brown	10
725858	1TFG0810BR	8 × 10	Brown	10
725859	1TFG0812BR	8 × 12	Brown	10
725893	1TFG0812BE	8 × 12	Beige	10
725860	1TFG0814BR	8 × 14	Brown	10
725861	1TFG0816BR	8 × 16	Brown	10
725862	1TFG0818BR	8 × 18	Brown	10
725863	1TFG0820BR	8 × 20	Brown	5
725887	1TFG0824WH	8 × 24	White	5
725864	1TFG0824BR	8 × 24	Brown	5
725894	1TFG0824BE	8 × 24	Beige	5
725865	1TFG0830BR	8 × 30	Brown	5
725895	1TFG0830BE	8 × 30	Beige	5
725866	1TFG1010BR	10 × 10	Brown	10
725867	1TFG1012BR	10 × 12	Brown	10
725868	1TFG1014BR	10 × 14	Brown	10
725869	1TFG1016BR	10 × 16	Brown	10
725870	1TFG1020BR	10 × 20	Brown	5
725871	1TFG1024BR	10 × 24	Brown	5
725872	1TFG1030BR	10 × 30	Brown	5
725873	1TFG1212BR	12 × 12	Brown	10
725874	1TFG1214BR	12 × 14	Brown	10
725875	1TFG1216BR	12 × 16	Brown	10
725876	1TFG1218BR	12 × 18	Brown	5
725877	1TFG1220BR	12 × 20	Brown	5
725878	1TFG1224BR	12 × 24	Brown	5
725879	1TFG1230BR	12 × 30	Brown	5
725880	1TFG1414BR	14 × 14	Brown	5
725881	1TFG1416BR	14 × 16	Brown	5
725882	1TFG1420BR	14 × 20	Brown	5
725883	1TFG1424BR	14 × 24	Brown	5
725884	1TFG1430BR	14 × 30	Brown	5
725886	1TFG1616BR	16 × 16	Brown	5
725888	1TFG1620BR	16 × 20	Brown	5
725890	1TFG1624BR	16 × 24	Brown	5

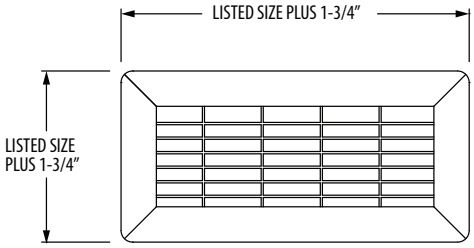

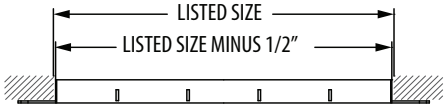

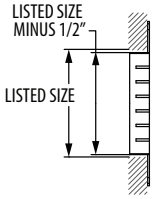

– E.&O.E. – All Prices F.O.B. Our Warehouse – Subject to Change Without Notice – All Taxes Extra – May not be Available at All Branches –

FLOOR REGISTERS (FL)

ITEM #	MODEL	SIZE (")	COLOUR	CTN/QTY
725370	1FL0210BR	2-1/4 × 10	Brown	20
725371	1FL0210WH	2-1/4 × 10	White	20
725372	1FL0210AL	2-1/4 × 10	Aluminum	20
725373	1FL0210BE	2-1/4 × 10	Beige	20
725374	1FL0210BL	2-1/4 × 10	Black	20
725375	1FL0210BB	2-1/4 × 10	Brass	20
725376	1FL0212BR	2-1/4 × 12	Brown	20
725377	1FL0212WH	2-1/4 × 12	White	20
725378	1FL0212GR	2-1/4 × 12	Grey	20
725379	1FL0212AL	2-1/4 × 12	Aluminum	20
725380	1FL0212BE	2-1/4 × 12	Beige	20
725381	1FL0212PE	2-1/4 × 12	Pewter	20
725382	1FL0212BL	2-1/4 × 12	Black	20
725383	1FL0212BB	2-1/4 × 12	Brass	20
725384	1FL0214BR	2-1/4 × 14	Brown	20
725385	1FL0214GR	2-1/4 × 14	Grey	20
725386	1FL0214WH	2-1/4 × 14	White	20
725387	1FL0214BE	2-1/4 × 14	Beige	20
725388	1FL0214AL	2-1/4 × 14	Aluminum	20
725389	1FL0214BB	2-1/4 × 14	Brass	20
725390	1FL0310BR	3 × 10	Brown	20
725391	1FL0310GR	3 × 10	Grey	20
725392	1FL0310WH	3 × 10	White	20
725393	1FL0310AL	3 × 10	Aluminum	20
725394	1FL0310BE	3 × 10	Beige	20
725395	1FL0310PE	3 × 10	Pewter	20
725396	1FL0310CH	3 × 10	Chrome	20
725397	1FL0310BL	3 × 10	Black	20
725398	1FL0310BB	3 × 10	Brass	20
725399	1FL0408BR	4 × 8	Brown	20
725400	1FL0408WH	4 × 8	White	20
725401	1FL0410BR	4 × 10	Brown	20
725402	1FL0410GR	4 × 10	Grey	20
725403	1FL0410WH	4 × 10	White	20
725404	1FL0410AL	4 × 10	Aluminum	20
725405	1FL0410BE	4 × 10	Beige	20
725406	1FL0410PE	4 × 10	Pewter	20
725407	1FL0410CH	4 × 10	Chrome	20
725408	1FL0410BL	4 × 10	Black	20
725409	1FL0410BB	4 × 10	Brass	20
725410	1FL0412BR	4 × 12	Brown	20
725411	1FL0412WH	4 × 12	White	20
725412	1FL0412GR	4 × 12	Grey	20
725413	1FL0412BE	4 × 12	Beige	20
725414	1FL0412PE	4 × 12	Pewter	20
725415	1FL0412CH	4 × 12	Chrome	20
725416	1FL0412BL	4 × 12	Black	20
725417	1FL0412BB	4 × 12	Brass	20
725418	1FL0414BR	4 × 14	Brown	20
725419	1FL0414WH	4 × 14	White	20
725420	1FL0414GR	4 × 14	Grey	20
725421	1FL0610BR	6 × 10	Brown	20
725422	1FL0610WH	6 × 10	White	20
725423	1FL0612BR	6 × 12	Brown	20
725424	1FL0612WH	6 × 12	White	20
725425	1FL0614BR	6 × 14	Brown	20
725426	1FL0614WH	6 × 14	White	20

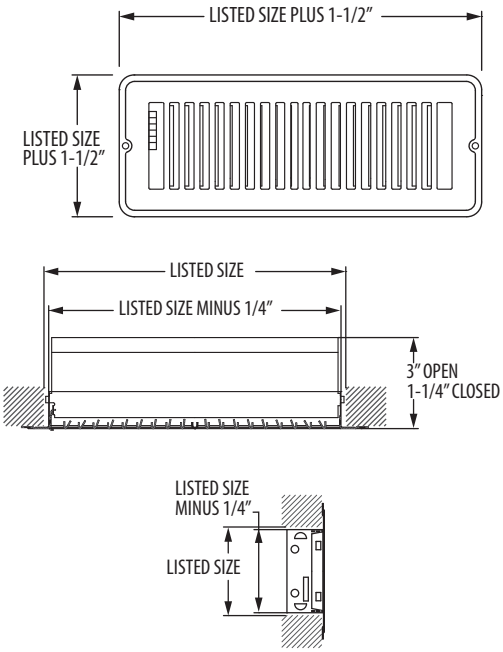

– E.&O.E. – All Prices F.O.B. Our Warehouse – Subject to Change Without Notice – All Taxes Extra – May not be Available at All Branches –

ECCO GRILLES, REGISTERS AND DIFFUSERS

BASEBOARD REGISTERS (BBRT) — WHITE

ITEM #	MODEL	SIZE (")	CTN/QTY
725930	BBRT0806WH-C	8 × 6	20
725931	BBRT1206WH-C	12 × 6	20
725932	BBRT1406WH-C	14 × 6	20
725933	BBRT1008WH-C	10 × 8	20
725934	BBRT1408WH-C	14 × 8	20

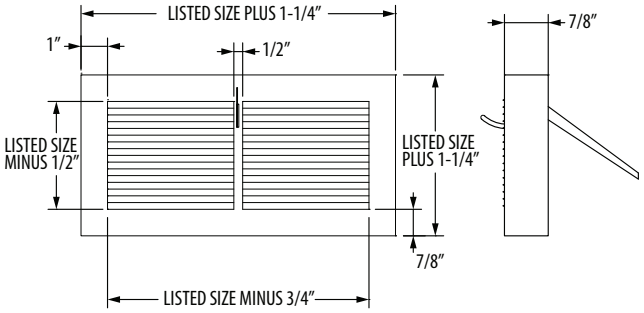

SINGLE DEFLECTION REGISTERS (SDF) — ALUMINUM & STEEL — WHITE

ITEM #	MODEL	SIZE (")	CTN/QTY
725760	SDF0606WH	6 × 6	10
725761	SDF0804WH	8 × 4	10
725762	SDF0806WH	8 × 6	10
725763	SDF0808WH	8 × 8	10
725764	SDF1004WH	10 × 4	10
725765	SDF1006WH	10 × 6	10
725766	SDF1008WH	10 × 8	10
725767	SDF1010WH	10 × 10	4
725768	SDF1204WH	12 × 4	10
725769	SDF1206WH	12 × 6	10
725770	SDF1208WH	12 × 8	10
725771	SDF1210WH	12 × 10	10
725772	SDF1212WH	12 × 12	10
725773	SDF1404WH	14 × 4	10
725774	SDF1406WH	14 × 6	10
725775	SDF1408WH	14 × 8	10

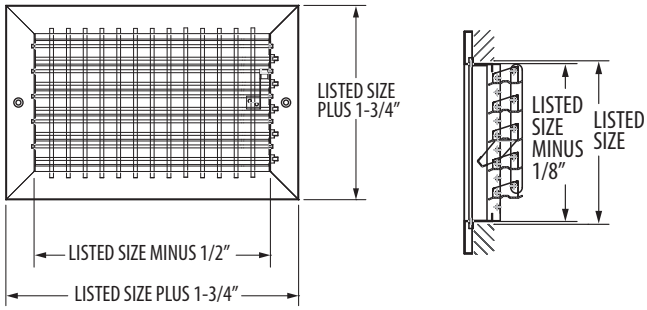

– E.&O.E. – All Prices F.O.B. Our Warehouse – Subject to Change Without Notice – All Taxes Extra – May not be Available at All Branches –

ECCO GRILLES, REGISTERS AND DIFFUSERS

SIDEWALL REGISTERS (BBRT-B) — STEEL — WHITE

ITEM #	MODEL	SIZE (")	CTN/QTY
725900	BBRT0806WH-B	8 × 6	20
725901	BBRT1004WH-B	10 × 4	20
725902	BBRT1006WH-B	10 × 6	20
725903	BBRT1008WH-B	10 × 8	20
725904	BBRT1206WH-B	12 × 6	20
725905	BBRT1208WH-B	12 × 8	20
725906	BBRT1406WH-B	14 × 6	20
725907	BBRT1408WH-B	14 × 8	20

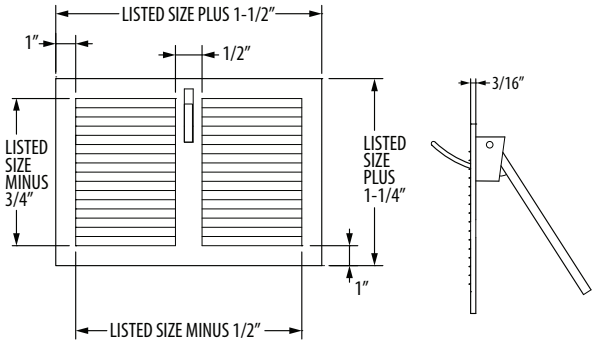

CEILING REGISTERS (CR) — WHITE

ITEM #	MODEL	SIZE (")	CTN/QTY
725926	1CR0310WH	3 × 10	20
725928	1CR0410WH	4 × 10	20

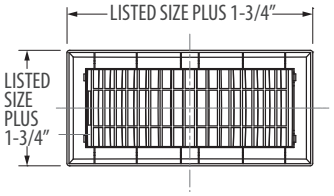

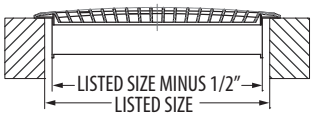

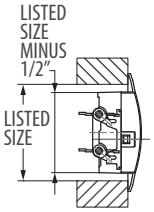

BASEBOARD DIFFUSERS (BB) — WHITE

ITEM #	MODEL	SIZE (")	CTN/QTY
725750	1BB1500WH	15	12
725752	1BB1800WH	18	12
725754	1BB2400WH	24	8

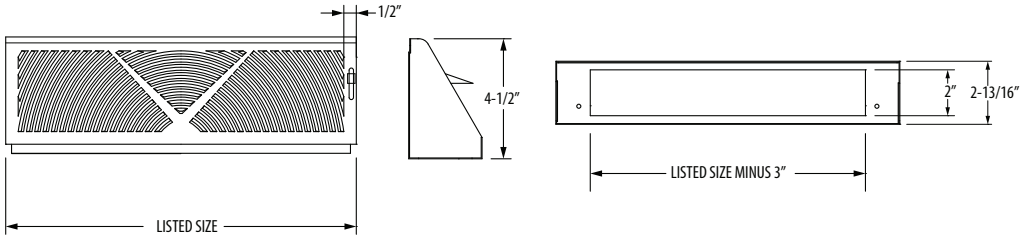

– E.&O.E. – All Prices F.O.B. Our Warehouse – Subject to Change Without Notice – All Taxes Extra – May not be Available at All Branches –

FLOOR DIFFUSERS — PLASTIC

FEATURES

- 75% Free Area
- 0° to 30° angled louvers provide widespread air deflection
- Textured finish provides a scratch resistant surface
- Reinforced corners for superior strength
- Gear driven damper with positive locking option
- Screw knockouts allow for wall or ceiling installation

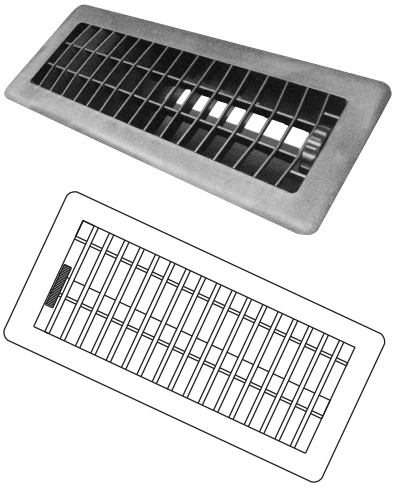

ITEM #	MODEL	COLOUR	SIZE (")	CTN/QTY
701840	E60P	White	3 × 10	30
701843	E60P	Grey	3 × 10	30
701845	E60P	Brown	3 × 10	30
701847	E60P	Beige	3 × 10	30
7018541	E60P	Black	3 × 10	20
701842	E60P	White	4 × 10	20
701844	E60P	Grey	4 × 10	20
701846	E60P	Brown	4 × 10	20
701848	E60P	Beige	4 × 10	20
701850	E60P	Black	4 × 10	20